VS COR® Flex 500 L
900
1000
1200

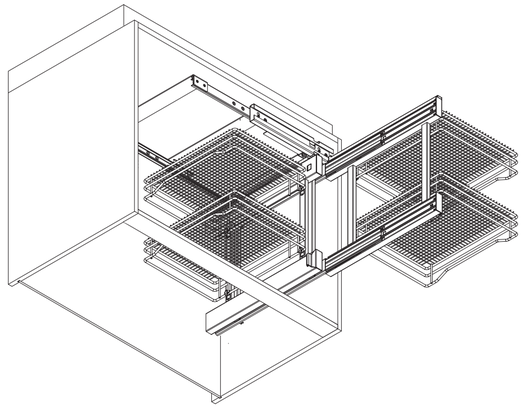

01/2025

VAUTH SAGEL

VAUTH SAGEL QUALITY MADE IN GERMANY

LGA Qualitäts-Zertifikat

VS COR® Flex 500 *R*
900
1000
1200

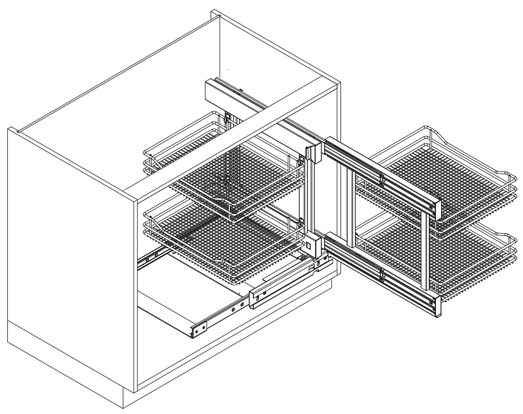

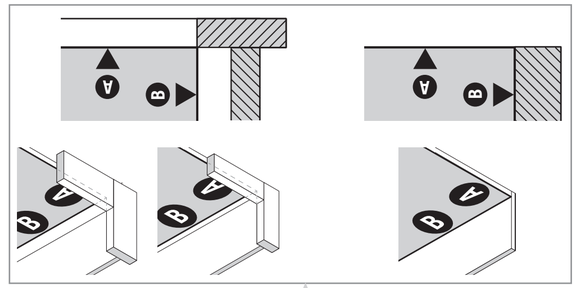

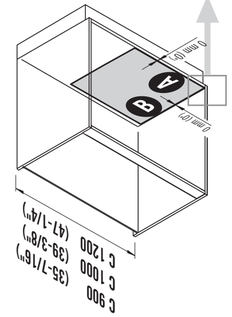

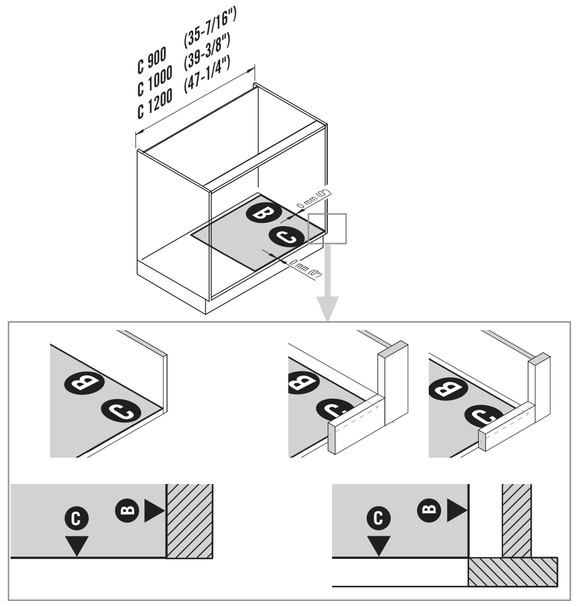

C 900 (35-7/16")
C 1000 (39-3/8")
C 1200 (47-1/4")

C 900 (35-7/16")
C 1000 (39-3/8")
C 1200 (47-1/4")

C 900 (35-7/16")
C 1000 (39-3/8")
C 1200 (47-1/4")

C 900 (35-7/16")
C 1000 (39-3/8")
C 1200 (47-1/4")

C 900 (35-7/16")
C 1000 (39-3/8")
C 1200 (47-1/4")

C 900 (35-7/16")
C 1000 (39-3/8")
C 1200 (47-1/4")

A

B

C

223 mm (8-3/4")
287 mm (11-1/4")
495 mm (19-1/2")
559 mm (22")

54 mm (2-1/8")
352 mm (13-7/8")
32 mm (1-1/4")
14 mm (1/2")

VS COR® Flex 500 L

900
1000
1200

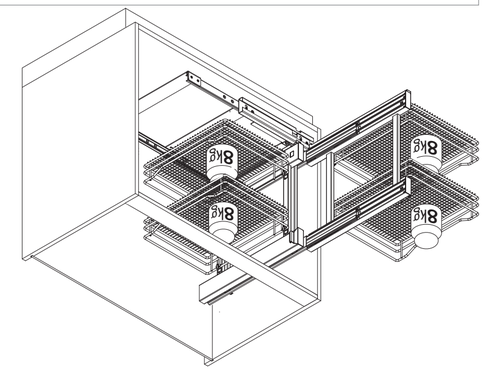

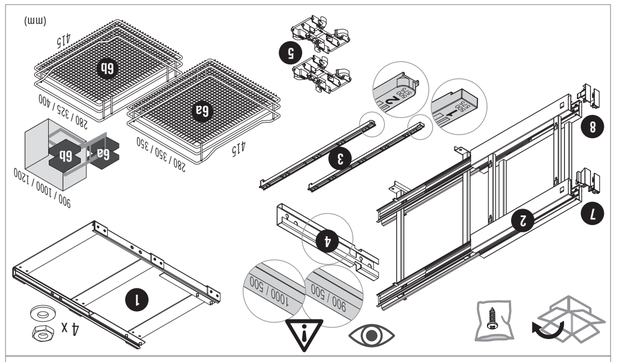

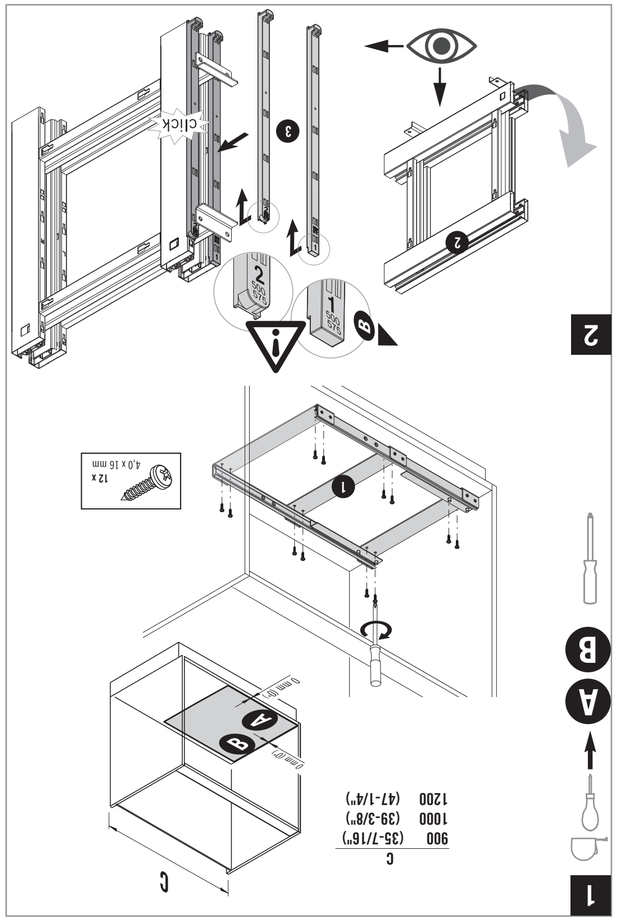

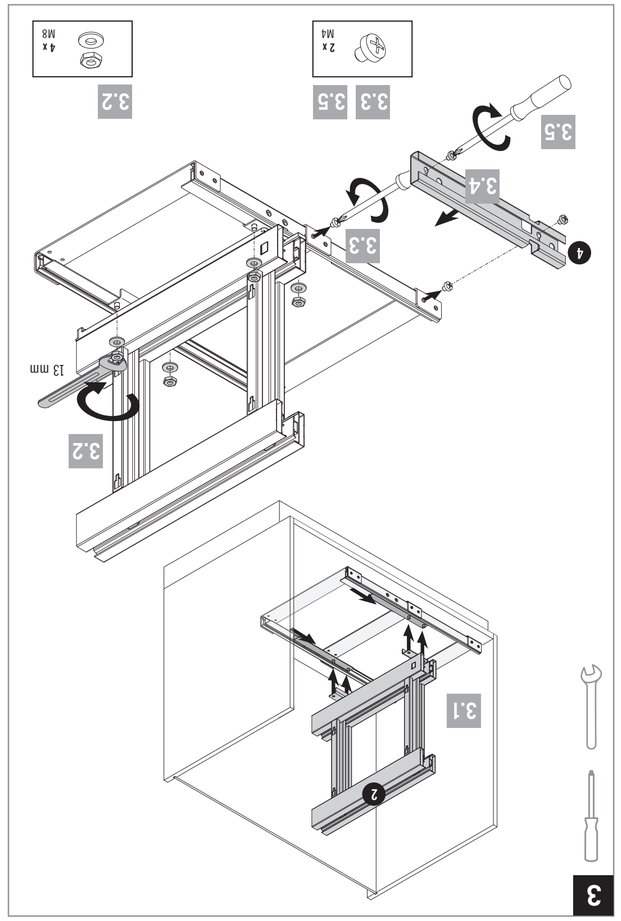

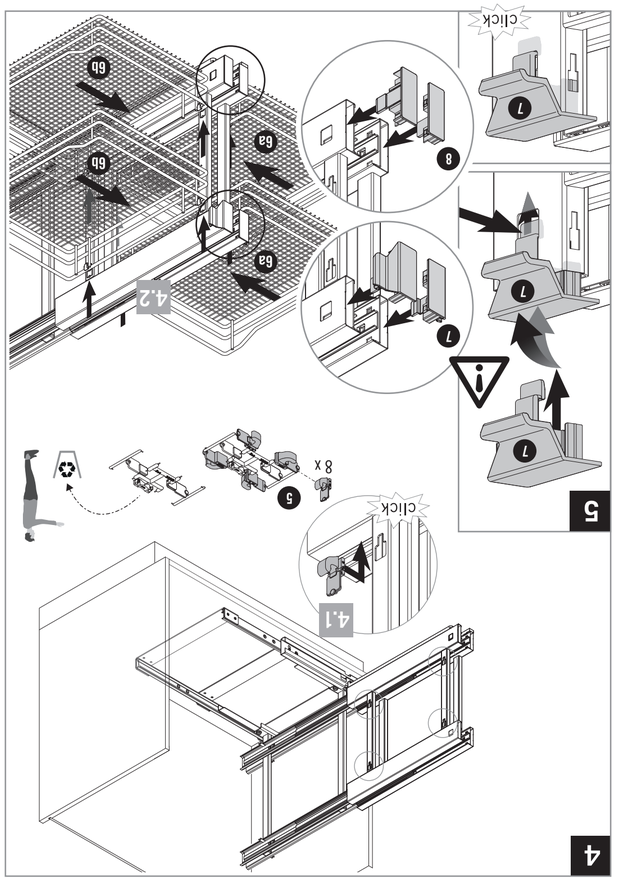

VAUTH-SAGEL Neue Straße 27 | 33034 Brakel-Erkeln +49 5272 601-01 vs@vauth-sagel.com

VAUTH-SAGEL Neue Straße 27 | 33034 Brakel-Erkeln +49 5272 601-01 vs@vauth-sagel.com

44010794_06

VS COR® Flex 500 R

900
1000
1200

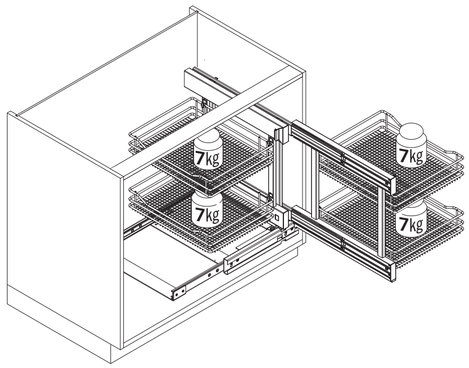

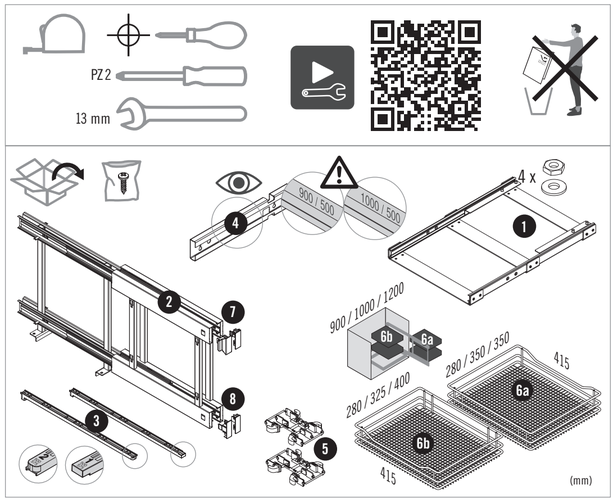

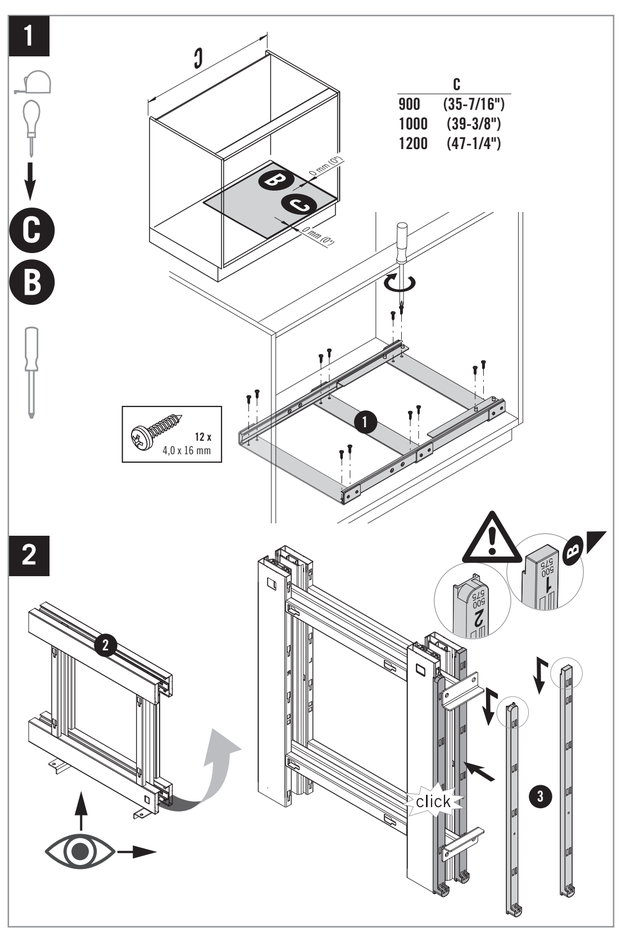

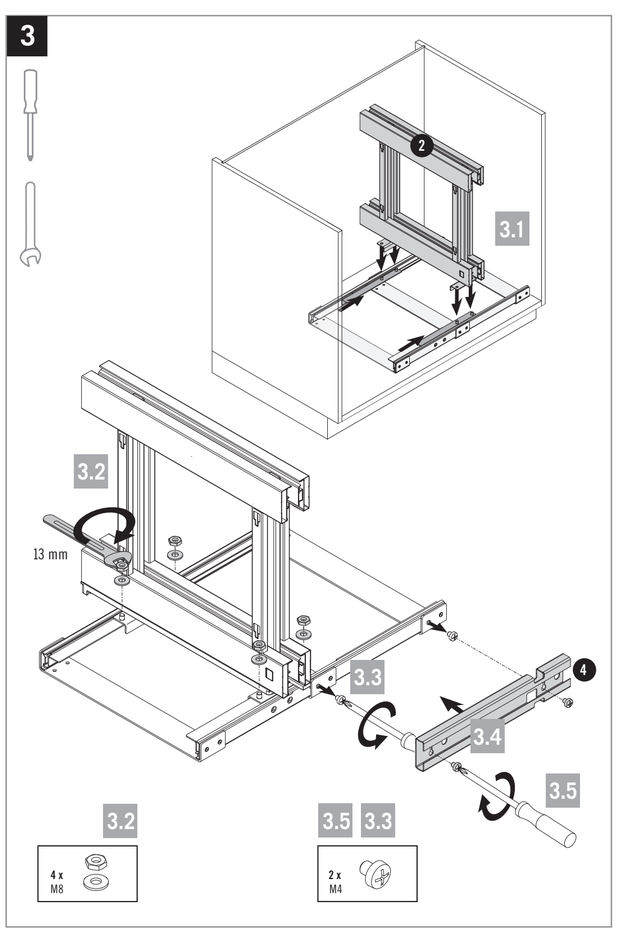

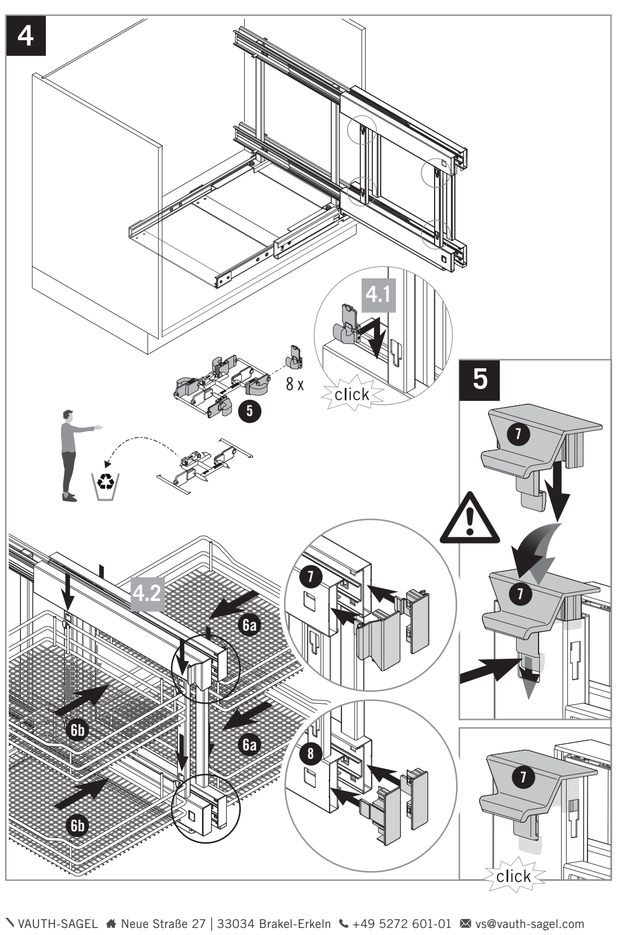

VAUTH-SAGEL Neue Straße 27 | 33034 Brakel-Erkeln +49 5272 601-01 vs@vauth-sagel.com